PERFORMANCE DATA NO LOAD AND NO DOOR OPENINGS AT MID-POINT CONTROL SETTING				
Type A with Run/Start Capacitor	65°F (18°C) Ambient		90°F (32°C) Ambient	
Operating Time	32 to 40%		55 to 65%	
Freezer Temperature	0° to 4°F -18° to -16°C		-1° to 3°F -18° to -16°C	
Refrigerator Temperature	34° to 39°F 1° to 4°C		34° to 39°F 1° to 4°C	
Low Side Pressure (cut-in)	5 to 12 psig 34 to 83 kPa		5 to 12 psig 34 to 83 kPa	
Low Side Pressure (cut-out)	-2 to 2 psig -14 to 14 kPa		-2 to 2 psig -14 to 14 kPa	
High Side Pressure (Last 1/3 of cycle)	90 to 115 psig 621 to 793 kPa		130 to 155 psig 896 to 1069 kPa	
Wattage (Last 1/3 of cycle)	120 to 150		130 to 160	
Amps (Running)	1.2 to 1.5		1.2 to 1.5	
Base Voltage	115 vac (127 vac max)		115 vac (127 vac max)	
DEFROST SPECIFICATIONS				
Cabinet Size	Thermostat		Heater	
	Cut-In	Cut-Out	Watts	Ohms
23' & 26'	25°F -4°C	47°F 8°C	450	30
Electronic Timer - (ADC) Defrost 24 minutes every 6 to 72 hours of compressor run time				
CONDENSER FAN MOTOR				
Watts	RPM		Amps	
3.1 (Energy Star - Some models)	1100 CW Opposite Shaft		.03 Running	
8.0	2550 CW Opposite Shaft		.07 Running	
ICE MAKER SPECIFICATIONS				
Electrical	115 vac (127 vac max)		60 Hertz	
Thermostat	Opens at 48°F (9°C)		Closes at 15°F (-9°C)	
Heater Wattage	165			
ICE MAKER PLUG CONNECTIONS				
Wire Number	**Wire Color**		**Connect to:**	
1	Green/Yellow		Ground	
2	Yellow		Water Valve	
3	Black		Line	
4	Lt. Blue		Neutral	

SERVICE DATA SHEET - 240389636

R134a

ICE & WATER - AUTOMATIC DEFROST
SIDE BY SIDE MODELS

IMPORTANT SAFETY NOTICE

The information provided herein is designed to assist qualified repair personnel only. Untrained persons should not attempt to make repairs due to the possibility of electrical shock. Disconnect power cord before servicing.

IMPORTANT

If any green grounding wires are moved during servicing, they must be returned to their original position and properly secured.

CAUTION: All electrical parts and wiring must be shielded from torch flame. Do not allow torch to contact insulation; it will char at 200°F and flash ignite (burn) at 500°F. Excessive heat will distort the plastic liner.

NOTE: This product comes equipped with an Electronic Defrost Control. To initiate defrost, depress the fresh food light switch 5 times in 6 seconds (light bulb must be working). To terminate defrost, depress the fresh food light switch 5 times in 6 seconds.

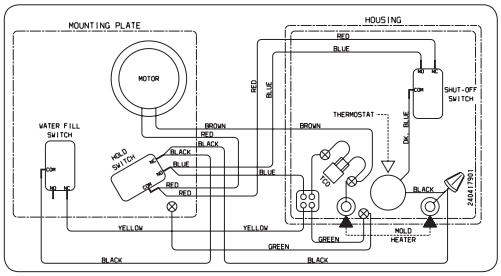

ICE MAKER INFORMATION

Test Cycling

Remove cover by inserting screwdriver in notch at bottom and prying cover from housing. Use screwdriver to rotate motor gear counterclockwise until holding switch circuit is completed. All components of ice maker should function to complete the cycle.

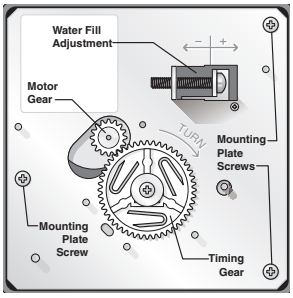

Water Fill Volume

The water fill adjustment screw will change the fill time. One full turn is equal to 20cc (.68 oz.). The correct fill is 102 to 130cc (3.4 to 4.3 oz.). When a water valve is replaced, the fill volume must be checked.

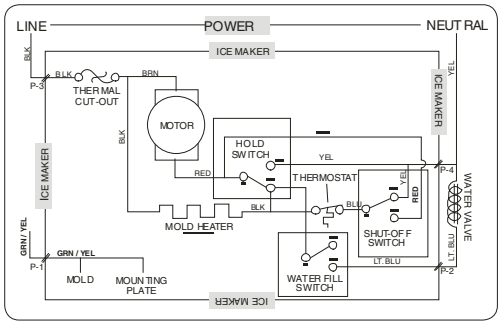

Downloaded from www.Manualslib.com manuals search engine

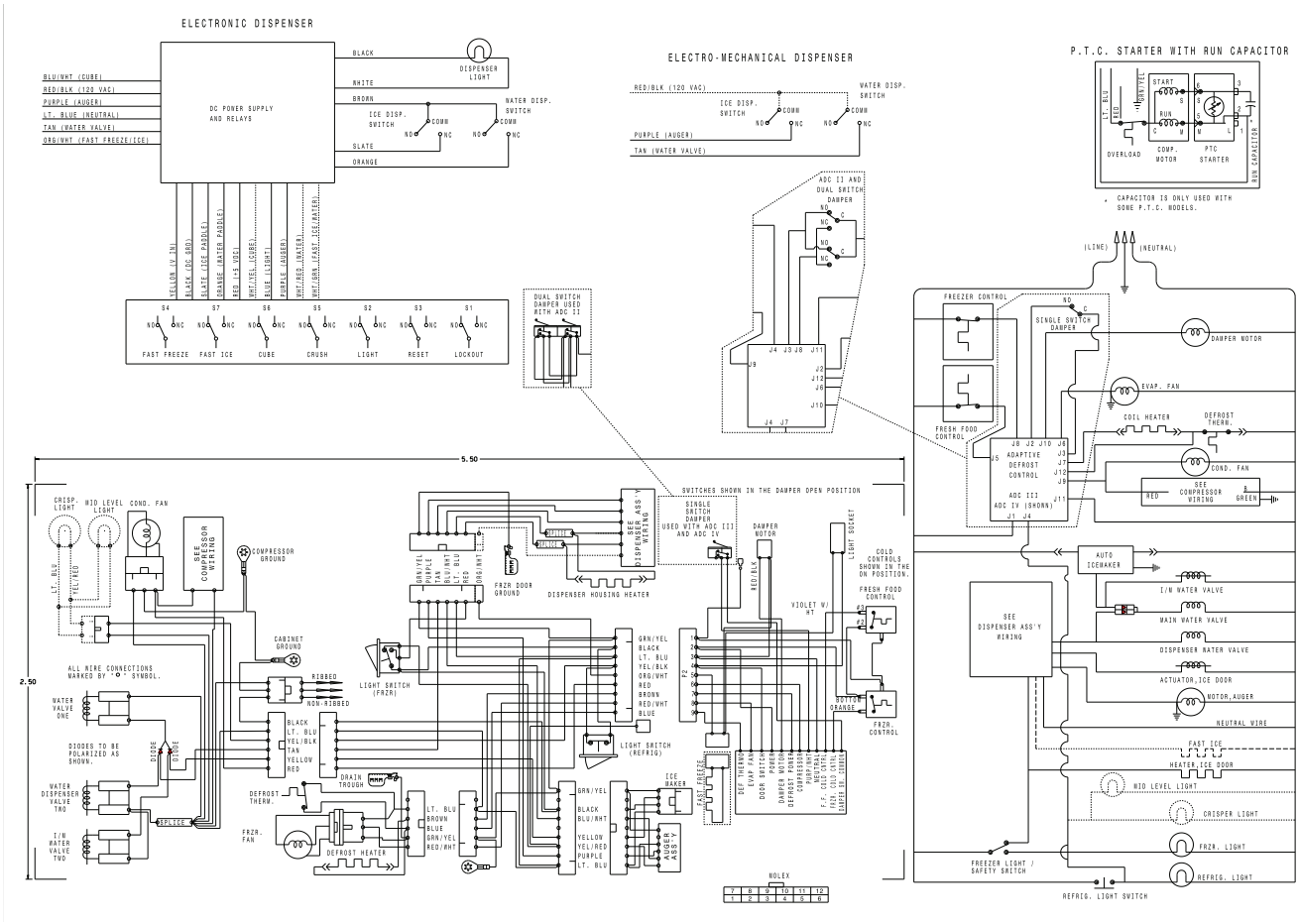

Downloaded from www.Manualslib.com manuals search engine